Electrolux PROFESSIONAL

Modular Cooking Range Line thermaline 90 - 800 mm Open base, GN conform, 1 Side (H2) - H=450

ITEM #

MODEL #

NAME #

SIS #

AIA #

589181 (MC1BCAHOOO) Open Base, one-side operated, GN - H2

Short Form Specification

Item No.

800 mm wide open base compartment to store pots, pans, sheet pans, etc. with hygienic design and round edges. Internal frame for heavy duty sturdiness in stainless steel. Flat surface construction, easily cleanable. Open storage space in the base accepts GN 1/1 containers.
IPX5 water resistant certification.
Configuration: One-side operated freestanding base, hygienic class H2.

APPROVAL:

Main Features

- All major components may be easily accessed from the front.
- Unit to be placed below modular top appliances to store pots, pans, sheet pans, etc.

Construction

- IPX5 water resistance certification.
- Hygienic design of the open base compartment with large round edges.
- 2 mm top in 1.4301 (AISI 304).
- Flat surface construction with minimal hidden areas to easily clean all surfaces
- Storage space in the base of the appliance that can accept GN1/1 containers.
- Internal frame for heavy duty sturdiness in stainless steel.

Modular Cooking Range Line thermaline 90 - 800 mm Open base, GN conform, 1 Side (H2) - H=450

Front

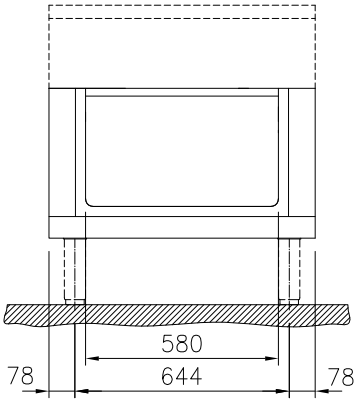

Side

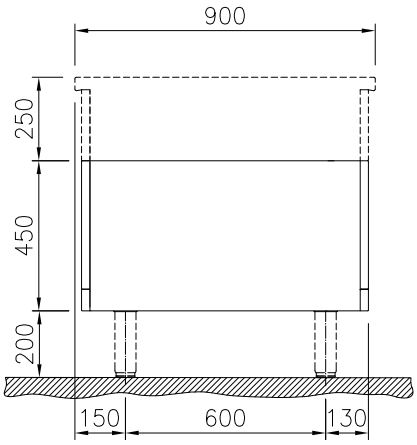

Top

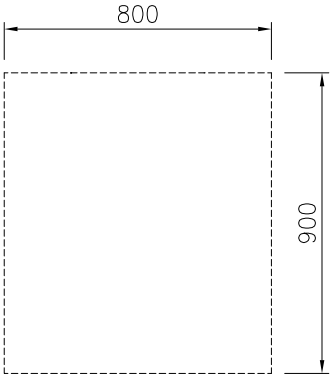

Key Information:

External dimensions, Width:	
589181 (MC1BCAHOOO)	800 mm
External dimensions, Depth:	900 mm
External dimensions, Height:	450 mm
Cupboard Cavity Dimensions (width):	580 mm
Cupboard Cavity Dimensions (height):	330 mm
Cupboard Cavity Dimensions (depth):	740 mm
Net weight:	22 kg

The company reserves the right to make modifications to the products without prior notice. All information correct at time of printing.

2024.10.06

Optional Accessories

- Stainless steel side panel, 900x700mm, freestanding — PNC 912512 ❑
- Stainless steel front kicking strip, 800mm width — PNC 912634 ❑
- Stainless steel side kicking strip left and right, freestanding, 900mm width — PNC 912657 ❑
- Stainless steel side kicking strips left and right, against the wall, 900mm width — PNC 912660 ❑
- Stainless steel side kicking strip left and right, back-to-back, 1810mm width — PNC 912663 ❑
- Stainless steel plinth, against wall, 800mm width — PNC 912939 ❑
- Stainless steel plinth, freestanding, 800mm width — PNC 912958 ❑
- Stainless steel panel, 900x700mm, against wall, left side — PNC 913101 ❑
- Stainless steel panel, 900x700mm, against wall, right side — PNC 913105 ❑
- Back panel, 800x450mm, for bases one-side operated — PNC 913167 ❑
- Stainless steel side panel, left, H=700 — PNC 913222 ❑
- Stainless steel side panel, right, H=700 — PNC 913223 ❑
- Perforated shelf for warming cabinets and cupboard bases (one-side operated TL80-85-90 and two-side operated for TL80) — PNC 913234 ❑
- Side reinforced panel only in combination with side shelf, for freestanding units — PNC 913260 ❑
- Side reinforced panel only in combination with side shelf, for against the wall installations, left — PNC 913267 ❑
- Side reinforced panel only in combination with side shelf, for against the wall installations, right — PNC 913269 ❑
- Side reinforced panel only in combination with side shelf, for back-to-back installations, left — PNC 913275 ❑
- Side reinforced panel only in combination with side shelf, for back-to-back installation, right — PNC 913276 ❑
- Shelf fixation for TL80-85-90 one-side operated, TL80 two-side operated — PNC 913281 ❑
- Stainless steel dividing panel, 900x700mm, (it should only be used between Electrolux Professional thermaline Modular 90 and thermaline C90) — PNC 913672 ❑
- Stainless steel side panel, 900x700mm, flush-fitting (it should only be used against the wall, against a niche and in between Electrolux Professional thermaline and ProThermetic appliances and external appliances - provided that these have at least the same dimensions) — PNC 913688 ❑

The company reserves the right to make modifications to the products without prior notice. All information correct at time of printing.